Snoopy - Specification Sheet
by Achille and Pier Giacomo Castiglioni, 1967

Mounting	Table Top
Lamp (Bulb) Description	1 x 1 X 72W BT-15 ECO Halogen (Included)
Environment	Indoor - Dry Location
Finish	Black
Technical and Product Description	SNOOPY table lamp providing direct light through a thick glass disc and an enameled reflector, both resting in perfect balance on a white marble base. Originally designed by Achille and Pier Giacomo Castiglioni in 1967, re-introduced in 2003. Integral dimmer and switch.

FU638030 - Do Not Use Black

Electrical

Voltage	120
Switching	Touch-sensor dimmer
IP Rating	IP20

Physical

Construction Material	Marble, steel
Weight	17.41 lbs

Dimensional Image

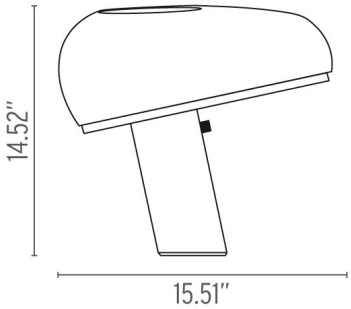

Lamping (Bulb)

72W BT-15 ECO Halogen